TMD102A(AUX)

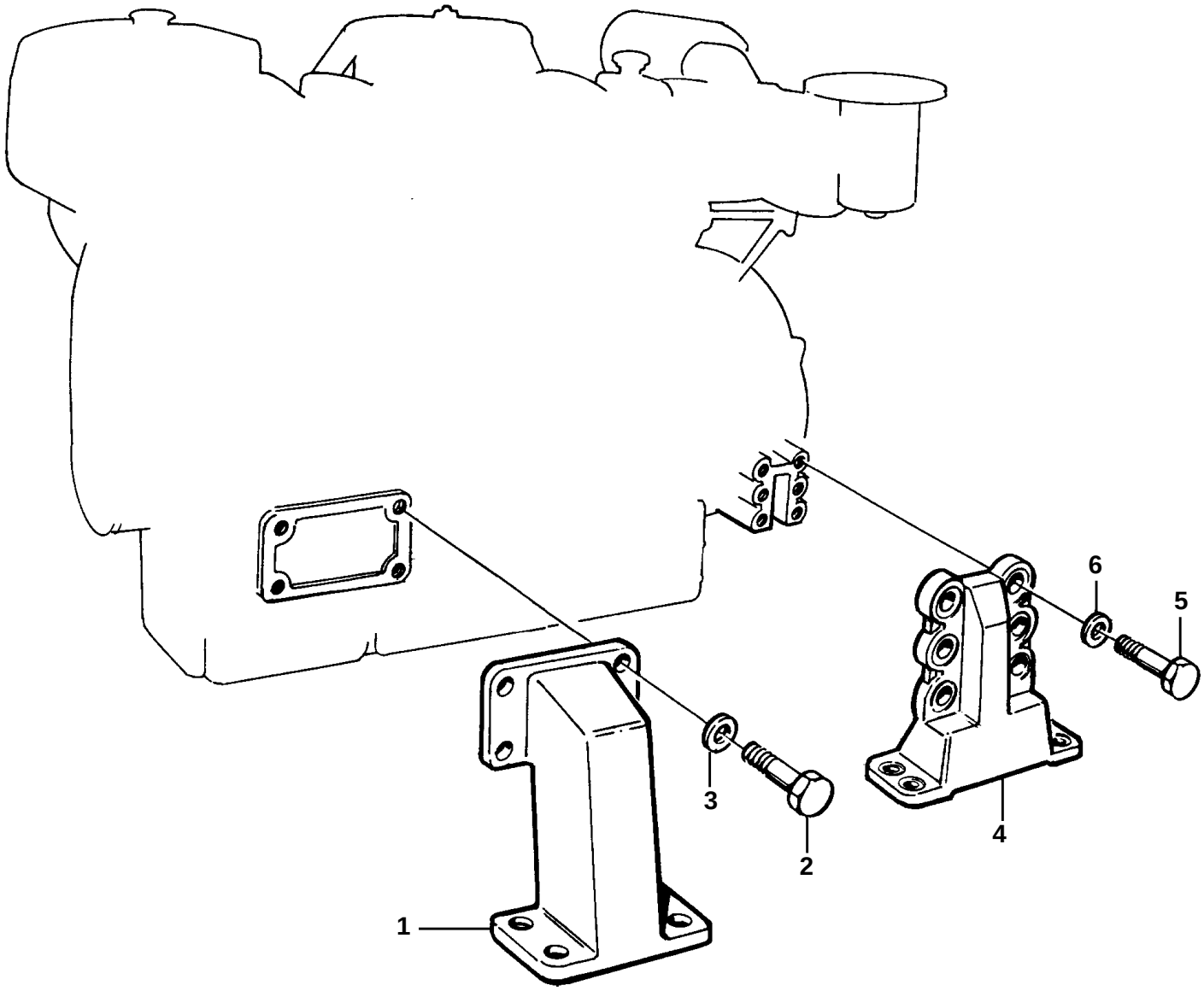

11534

TMD102A(AUX)

REF	PART NO.	QTY	DESCRIPTION		NOTES
1	820519	2	Bracket		HIGH
		2	Engine bracket		LOW
2	955580	8	Screw		
3	941911	8	Spring washer		
4	843069	2	Bracket		HIGH
		2	Bracket		LOW
5	955561	12	Screw		
6	940280	12	Spring washer		